CESC

All Senarios ESS Solution

Consistent Energy Storage Concept

2024.Oct.

Copyright © 2024 CESC GmbH. All rights reserved.

Outline

01. **Products and Certification**

02. **Warranty Solution**

03. **After-sales Service**

04. **Project Cases**

Copyright © 2024 CESC GmbH. All rights reserved.

1.1 Overview of products series

C&I cabinet

European version with power output of 105KW

North America version with power output of 125KW

Utility container

3.42MWh-20ft liquid cooling container

5MWh-20ft liquid cooling container

EMS Cloudplatform

EMS

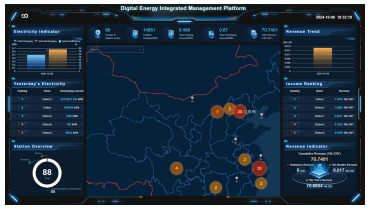

Cloud platform

Copyright © 2024 CESC GmbH. All rights reserved.

1.2 233 KWh of battery cabinet-key parameters

Safe and efficient

Smart and friendly

Economical and reliable

Flexible layout

	Europe	North America
Items	**specification**	
PCS(AC side)		
Rated AC power	105KW	125KW
rated current	152A	150A
output	3P4W+PE 400VAC	3P4W+PE 480VAC
overload capability	110% of rated power	110% of rated power
battery(DC side)		
chemistry	LiFePO4	
nominal capacity	280Ah	
power rate	0.5P	
battery pack configuration	1P52S	
battery rack configuration	1P260S	
system rated voltage	832V	
operating voltage range	728-936V	
system		
rated energy	233KWh	
cycle life	6000cycles @ (0.5C/0.5C, DOD90%, 70%EOL)	
cooling way	liquid cooling	
fire suppression	PACK grade (aerosol) + Cluster grade (aerosol + water spray)	
communication way	CAN/RS485/Ethernet	
IP evel	IP54 for cabinet,IP67 for pack	
weight	≤2800kg	
Dimension(W*D*H)	1400*1380*2385 (mm)	
certification	EC62619 IEC62477 IEC63056 IEC61000	UL1973 UL9540A UL9540

Copyright © 2024 CESC GmbH. All rights reserved.

1.2 233 KWh of battery cabinet-inside showcase

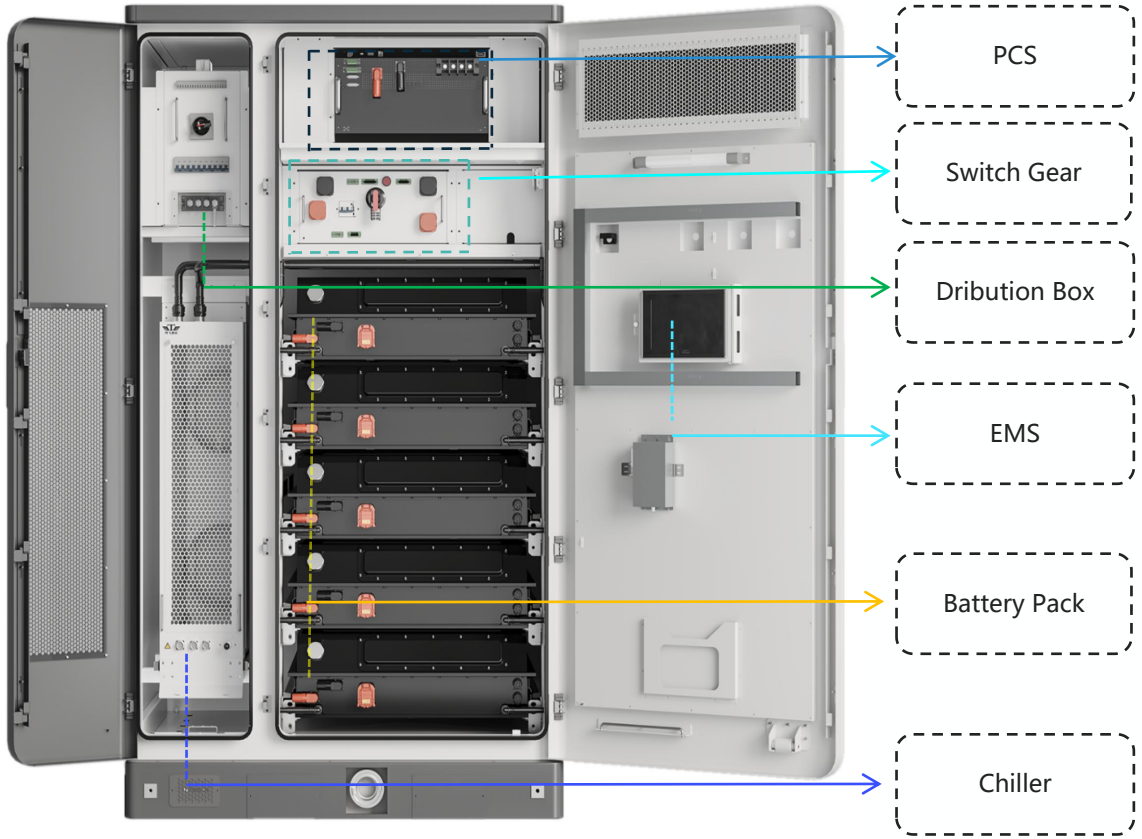

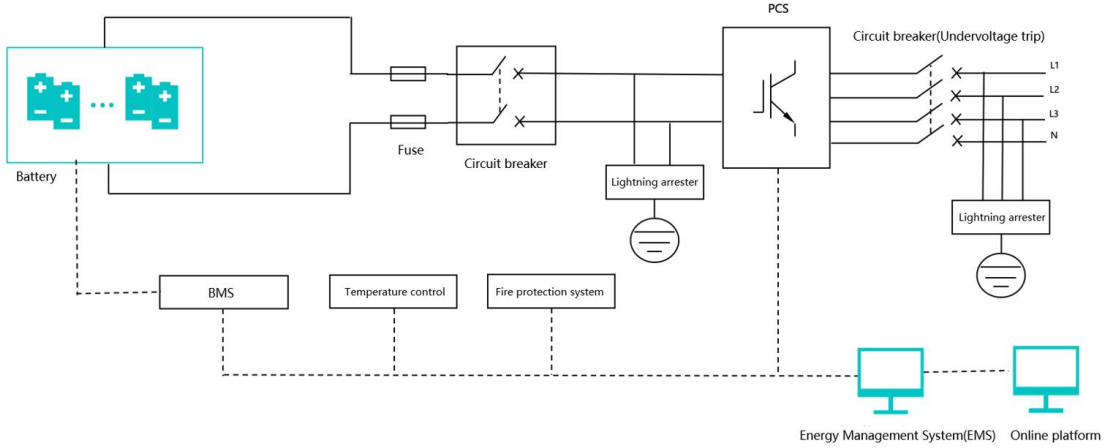

Comments:

1) 2 layers of BMS architecture(master-slave);

2) local controller(EMS) integrated help control and manage the operation of system

Copyright © 2024 CESC GmbH. All rights reserved.

1.2 233 KWh of battery cabinet-features

System life

More than 10 years of operation

safety performance

UL9540A

Cabinet fire barrier, 1200 ℃ * 2h

System RTE

System efficiency increased to 89%

system energy consumption

30% lower energy consumption than air cooling.

Flexible layout, quick installation

Multiple seamless side-by-side parallel, support 2/3/4-hour system applications

Reduce on-site installation and commissioning time by 50%, and put into production as soon as 4 hours.

Temperature control performance

PACK≤ 3 ℃, System ≤ 5 ℃

Copyright © 2024 CESC GmbH. All rights reserved.

1.2 233 KWh of battery cabinet-PACK safety

Extreme safety technology：

The battery cell is made of car-grade material, which is designed without thermal runaway spread. Built-in 144g aerosol module, thermal runaway can not spread further.

Packing pressure self-balancing patented technology：

Internal pressure change after adaptive thermal runaway

Early warning technology：

Early Warning of Battery System Based on Electro-gas-thermal coupling battery SOX intelligent diagnosis

Copyright © 2024 CESC GmbH. All rights reserved.

1.2 233 KWh of battery cabinet-Fire protection architecture

Pack level

Built-in 144g aerosol fire protection module.

Precision jet fire extinguishing

Rack level

Aerosol

Maximum control of battery reignition

Cabinet level

Water sprinkler protection

Reduce the risk of fire spreading

Copyright © 2024 CESC GmbH. All rights reserved.

1.2 233 KWh of battery cabinet-Fire protection architecture

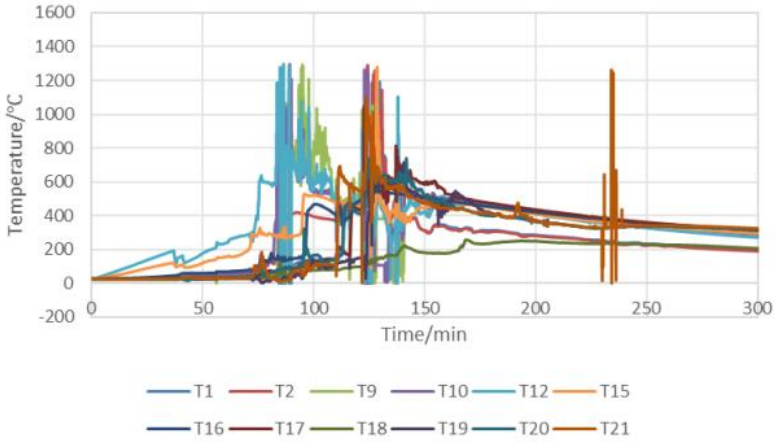

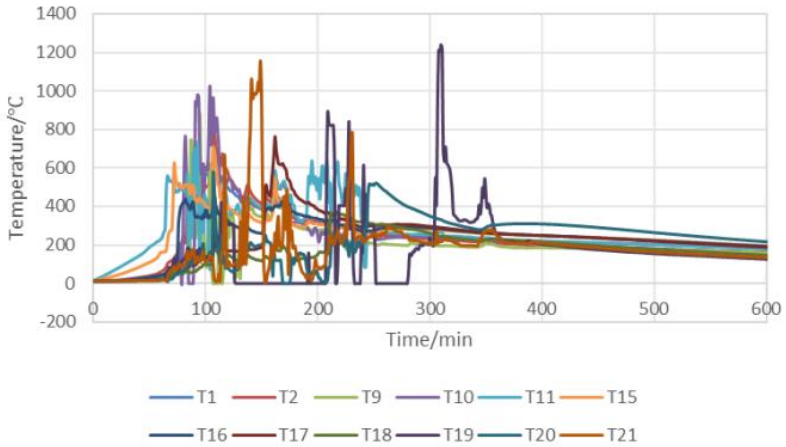

Battery pack UL9540A test

All-in-one system UL9540A test

UL9450A thermal runaway spread test, no fire and explosion throughout the process, controllable in the safety accident cabinet.

Copyright © 2024 CESC GmbH. All rights reserved.

1.1 Multiple application scenario

Commercial Carport

Factory

Copyright © 2024 CESC GmbH. All rights reserved.

1.1 Multiple application scenarios

Office Building / Shopping Mall / Hotel

Large Scale Facility

Copyright © 2024 CESC GmbH. All rights reserved.

1.4 liquid cooling container 5MWh-20ft-key parameters

role	Items	Parameters	Remark
Cell	Chemistry	LFP	
	Nominal capacity (Ah)	300	0.5P, 25℃
Module	Configuration	1P44S	
	Nominal energy (kWh)	42.24	0.5P, 25℃
ESS Container	cell Configuration	9P396S	
	Nominal energy (kWh)	3421	0.5P, 25℃
	Nominal voltage (V)	1267.2	
	Operation voltage (V)	990~1425.6	T > 0℃
		1108.8~1425.6	T ≤ 0℃
	Nominal charge/discharge power rate	0.5P	
	Energy efficiency	≥ 93%	0.5P,25℃
	Communication interface	CAN/RS485/Ethernet	
	Cooling way	Liquid cooling	
	cycle life	7000cycles (0.5C/0.5C, DOD100%, 70%EOL)	
	IP level	Container: IP54	
		Module: IP67	
	temperature range(℃)	-30~60	
	fire suppression	PF6+sprinkler	
	Dimension (mm)	20ft standard container	Sea shipping
		896X1065X2385	
	Total weight (kg)	< 37000	
	certifications	IEC62619、IEC62477、IEC63056、IEC61000、UL1973、UL9540A、NFPA855、UN38.3	

Copyright © 2024 CESC GmbH. All rights reserved.

1.4 liquid cooling container 5MWh-20ft-key parameters

role	Items	Parameters	Remark
Cell	Chemistry	LFP	
	Nominal capacity (Ah)	314	0.5P, 25℃
Module	Configuration	1P104S	
	Nominal energy (kWh)	104.4	0.5P, 25℃
ESS Container	cell Configuration	12P4146S	
	Nominal energy (kWh)	5015	0.5P, 25℃
	Nominal voltage (V)	1331,2	
	Operation voltage (V)	1040~1497.6	T > 0℃
		1164.8~1497.6	T ≤ 0℃
	Nominal charge/discharge power rate	0.5P	
	Energy efficiency	≥ 93%	0.5P,25℃
	Communication interface	CAN/RS485/Ethernet	
	Cooling way	Liquid cooling	
	cycle life	8000cycles (0.5C/0.5C, DOD100%, 70%EOL)	
	IP level	Container: IP55	
		Module: IP67	
	temperature range(℃)	-30~60	
	fire suppression	Aerosol+sprinkler	
	Dimension (mm)	6056 x 2438 x 2896	Sea shipping
	Total weight (kg)	< 43500	
	certifications	IEC62619、IEC62477、IEC63056、IEC61000、UL1973、UL9540A、NFPA855、UN38.3	

Copyright © 2024 CESC GmbH. All rights reserved.

2.5 key sub-assemblies and their working mechanism for battery container

1.5.1 Exploded View

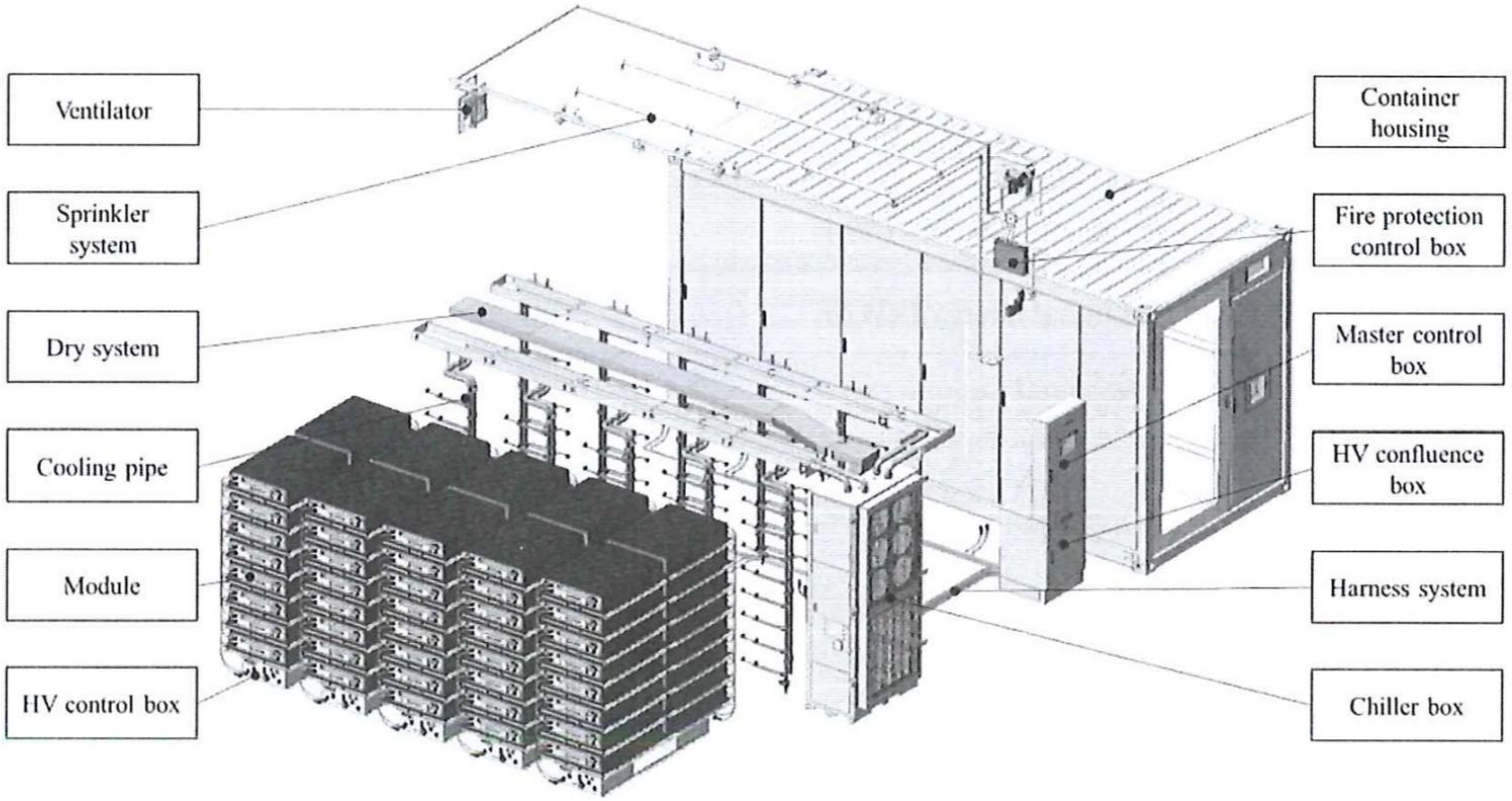

Description:

1)20ft container;

2)0.5P;

3)3.44Mwh

Copyright © 2024 CESC GmbH. All rights reserved.

1.5 key sub-assemblies and their working mechanism for battery container

1.5.2 battery pack

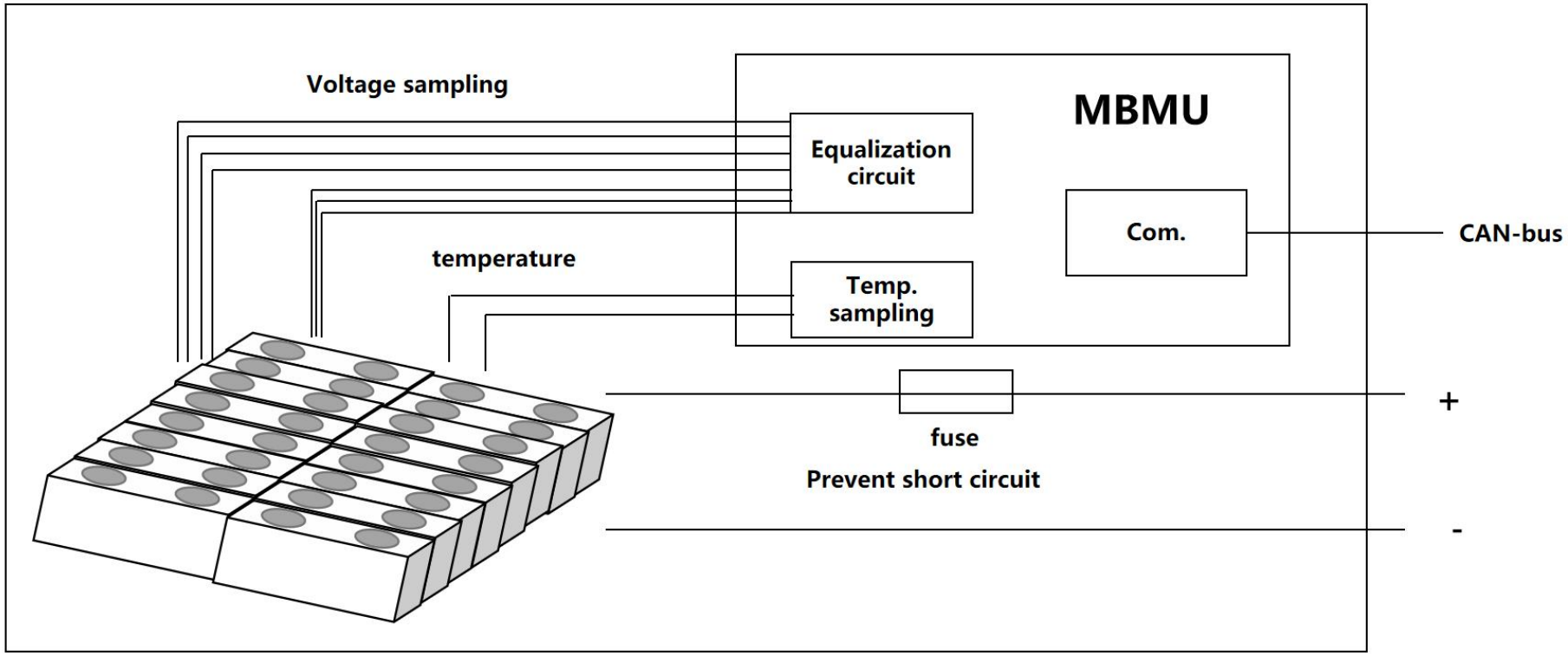

Copyright © 2024 CESC GmbH. All rights reserved.

1.5 key sub-assemblies and their working mechanism for battery container

1.5.3 PDU (switch gear)

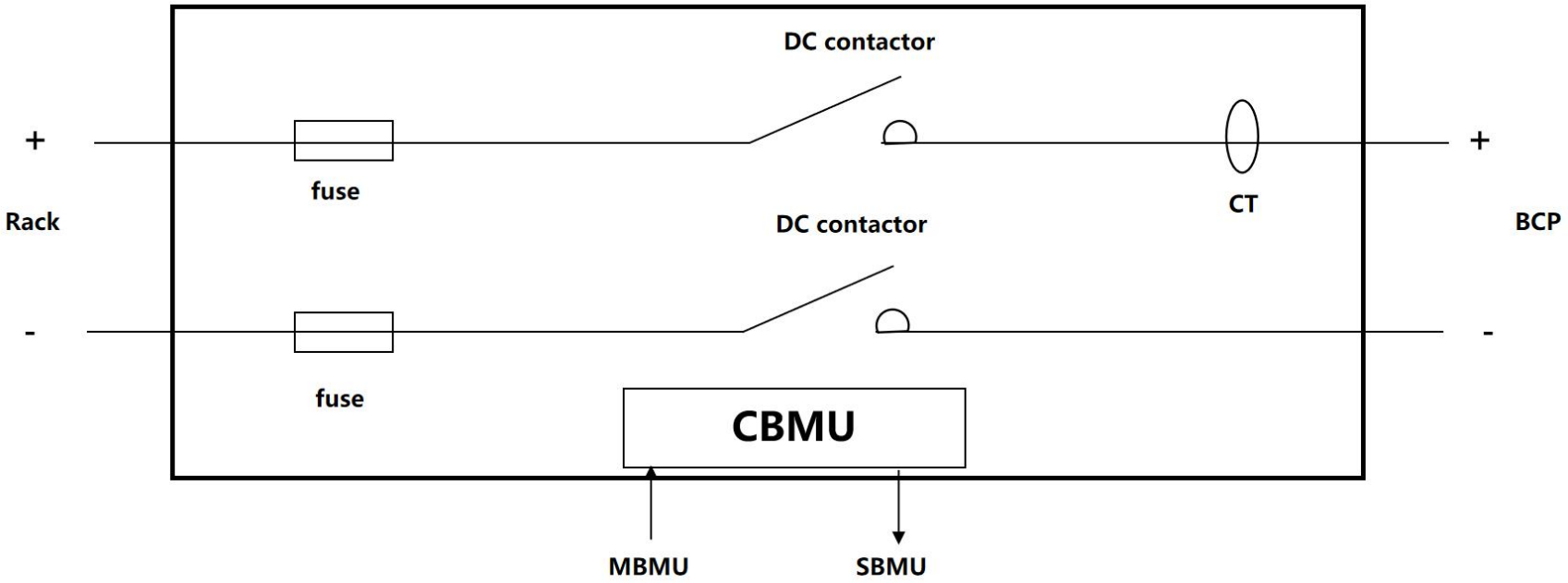

Functions:

1) Circuit protection design prevents circulating current between two adjacent racks;

2) Current measuring for monitoring and analysis;

3) CBMU Communicating with MBMU and SBMU

Copyright © 2024 CESC GmbH. All rights reserved.

1.5 key sub-assemblies and their working mechanism for battery container

1.5.4 BCP

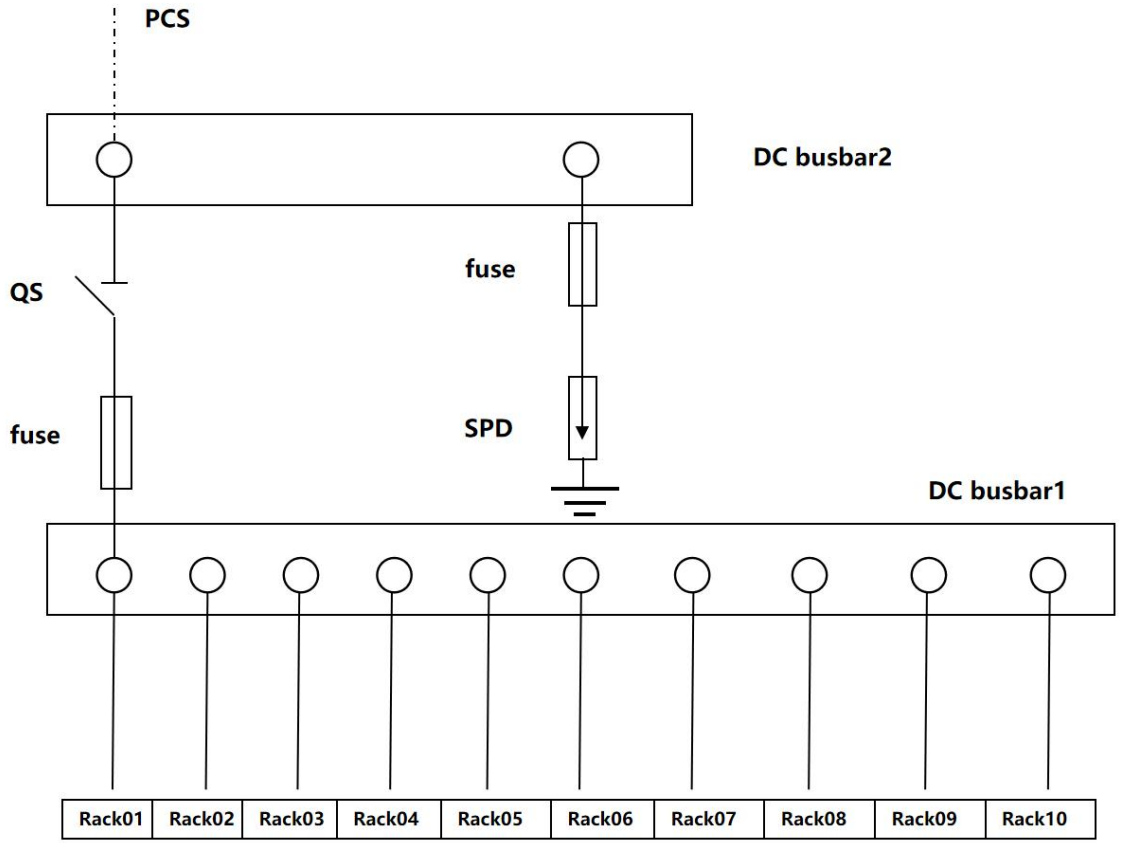

Function:

1) Current confluence
2) Circuit protection
3) Connecting PCS and battery

Copyright © 2024 CESC GmbH. All rights reserved.

1.5 key sub-assemblies and their working mechanism for battery container

1.5.5 master cabinet

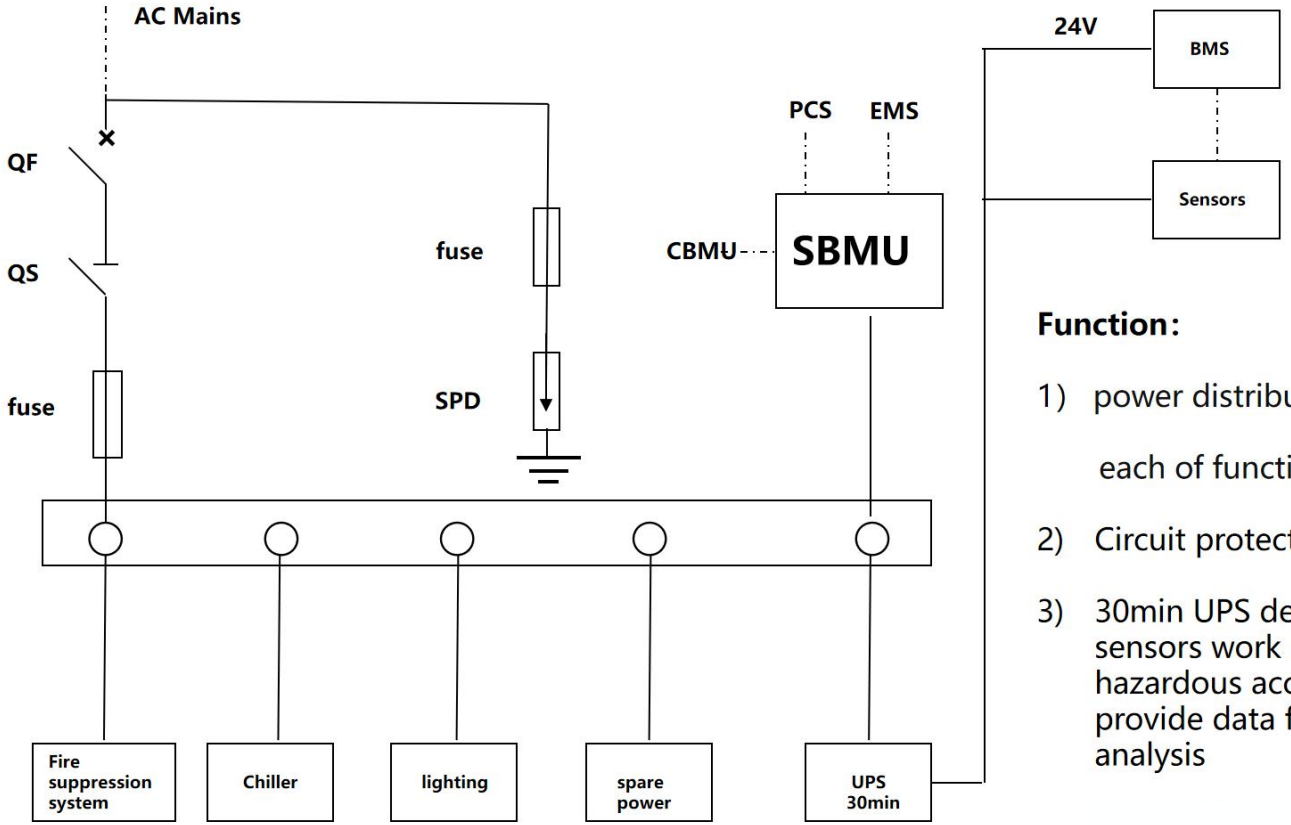

Function:

1) power distribution and power supply for each of function module
2) Circuit protection
3) 30min UPS design enables BMS and sensors work right in the event of hazardous accident or power outage to provide data for the subsequent failure analysis

Copyright © 2024 CESC GmbH. All rights reserved.

1.5 key sub-assemblies and their working mechanism for battery container

1.5.6 thermal management system

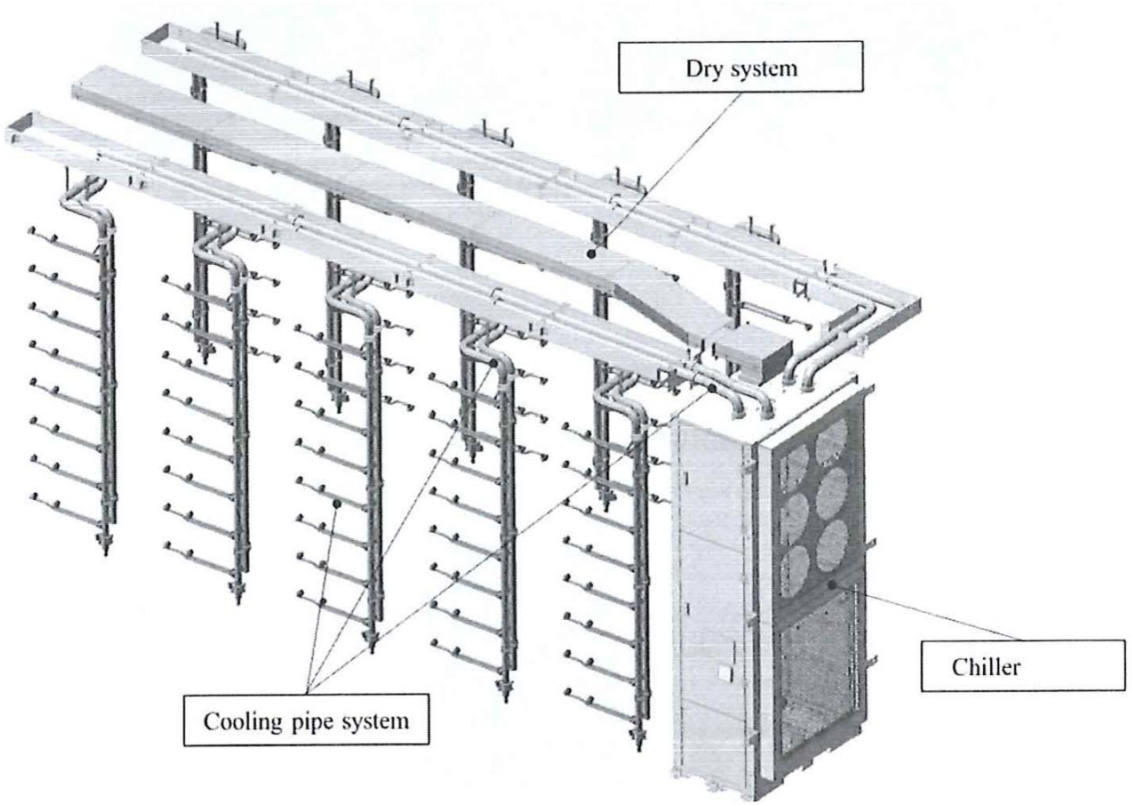

Function: cooling ,heating dehumidification

Working mechanism:

- **Cooling:**

1) 25℃<Tmax<28℃ or 22℃<Tavg< 25℃,the pump start to work and pump the coolant into circulating waterway;

2) Tmax>28℃, Tavg>25℃ or coolant Tinlet>12℃, the chiller start to work, Tinlet<12℃ the chiller stop to work,

3) Tmax<25℃ or 22℃<Tavg< 22℃,the pump and chiller stop to work

- **Heating:**

1) Tmin< 12℃ or Tavg< 15℃,the heater starts to work , when coolant Tinlet reaches 30℃, the pump start to work;

2) When Tmin> 20℃ or Tavg>25℃,the pump and the h

Copyright © 2024 CESC GmbH. All rights reserved.

1.5 key sub-assemblies and their working mechanism for battery container

1.5.7 fire suppression system

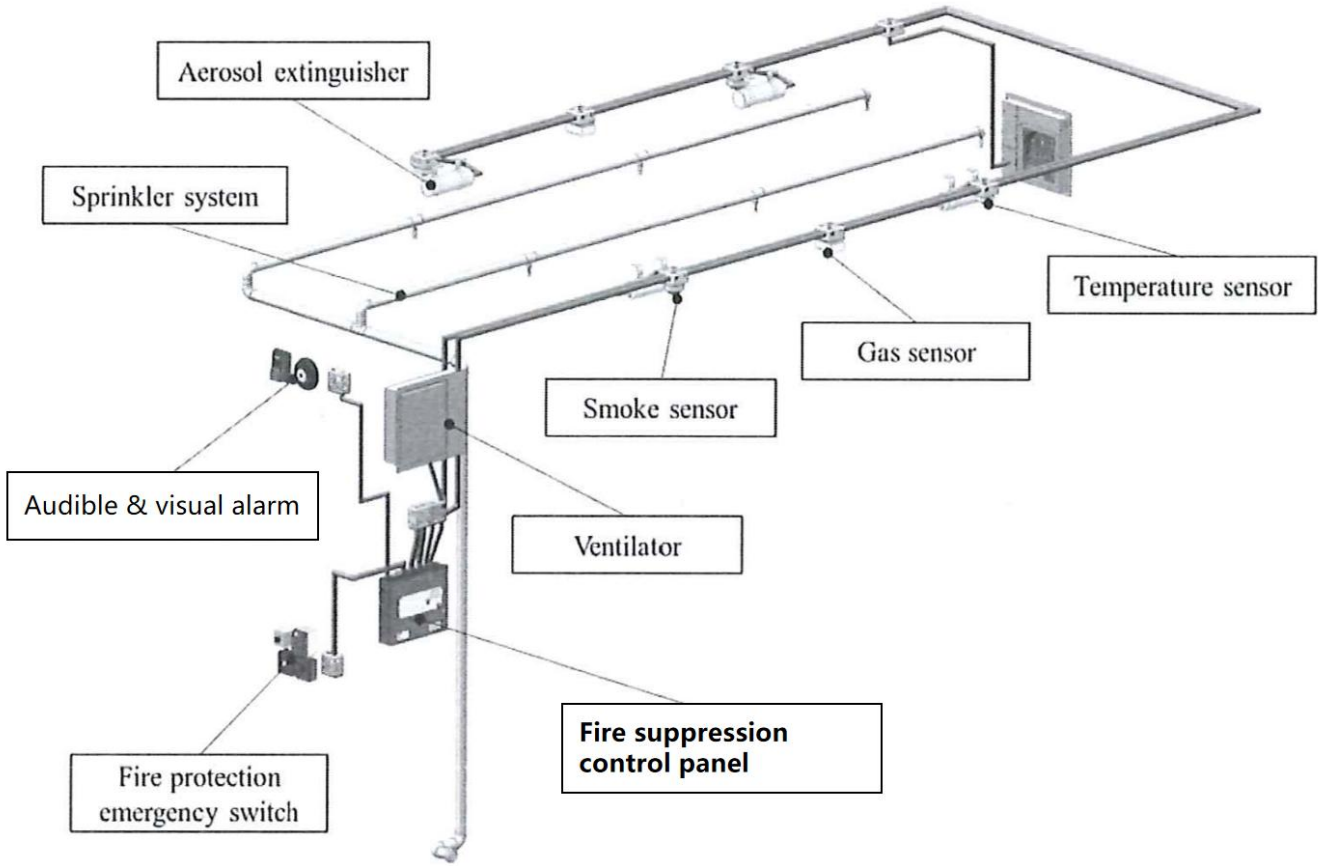

Function:

1) the fire suppression control panel manages operation of whole system and communicates with the SBMU

2) Linkage with the gas purge system

3) The design is in accordance with **NFPA855 NFPA 69**

Working logic:

……

Copyright © 2024 CESC GmbH. All rights reserved.

1.5 key sub-assemblies and their working mechanism for battery container

1.5.8 BMS

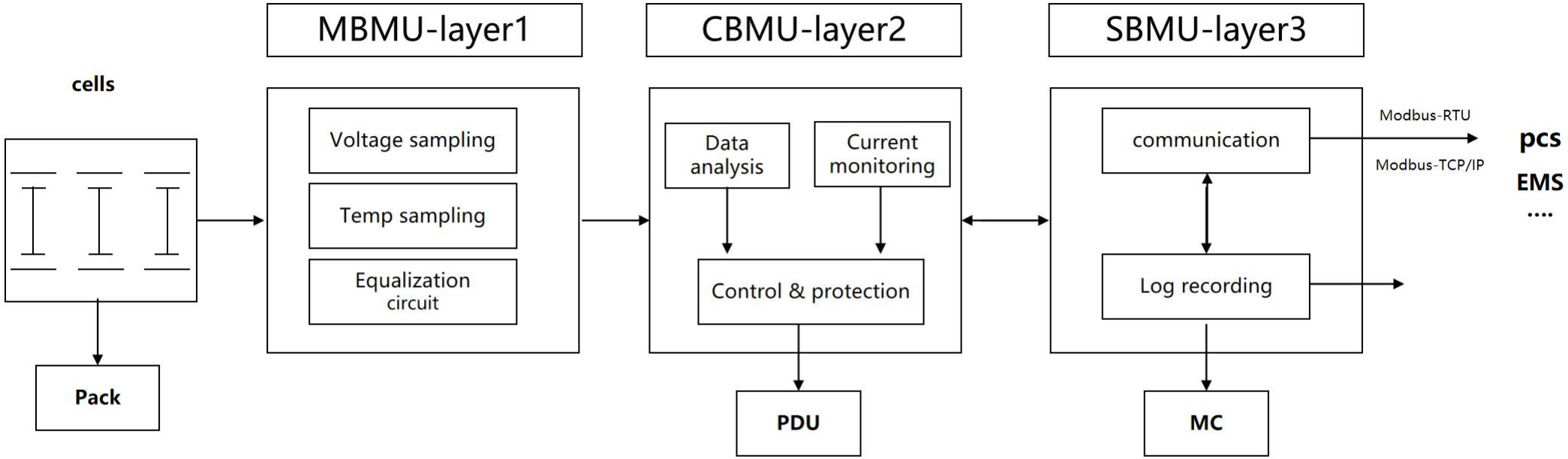

comments:

1) Equalization way: passive or active;

2) Vendors :Gold electronics，BMS-er，and Other lesser known small suppliers

Copyright © 2024 CESC GmbH. All rights reserved.

1.5 key sub-assemblies and their working mechanism for battery container

1.5.9 electrical diagram

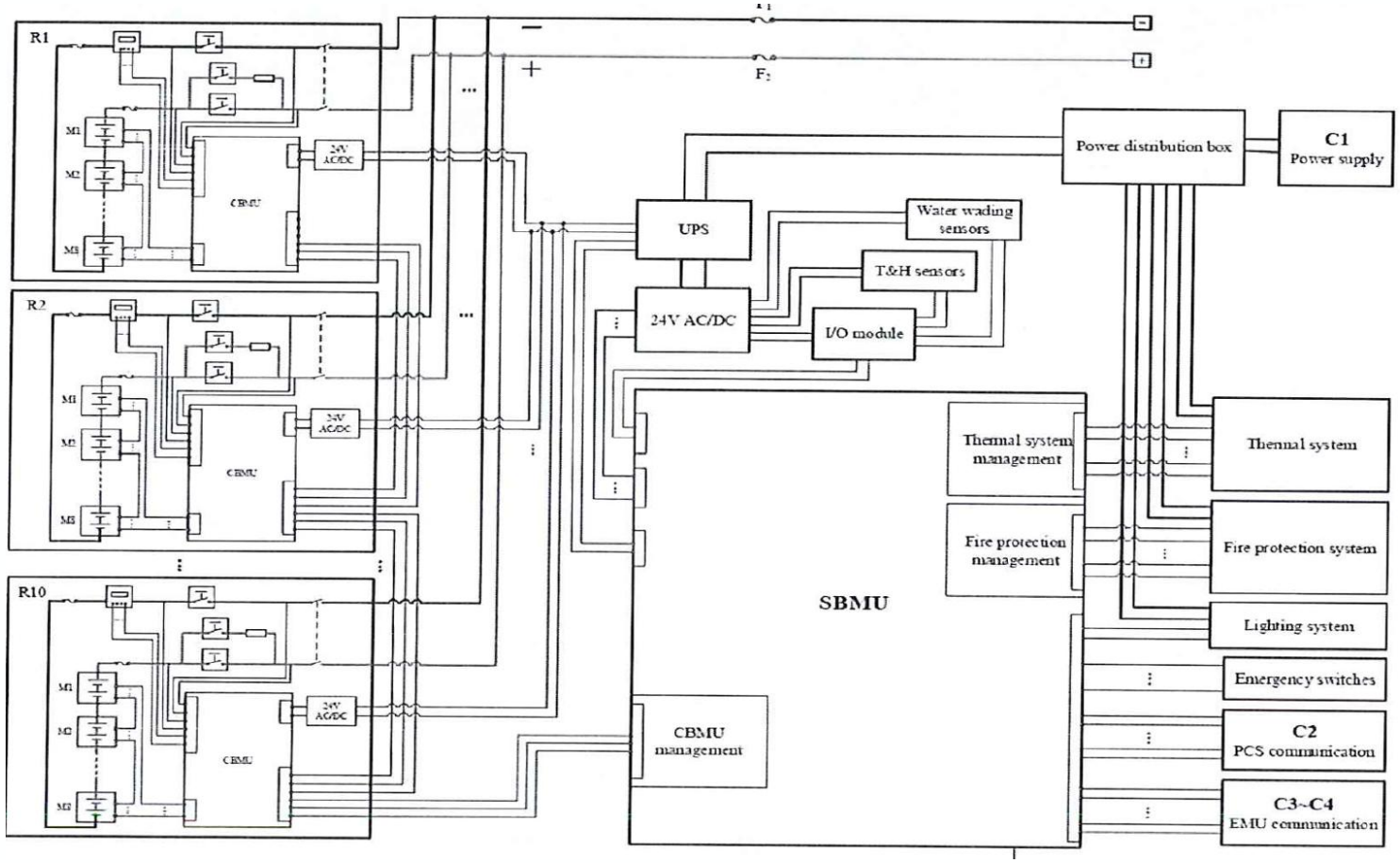

Copyright © 2024 CESC GmbH. All rights reserved.

1.6 EMS& cloud platform

comments:

1)we have an EMS expert team;

2)the EMS will be developed upon project request,will vary project by project;

Copyright © 2024 CESC GmbH. All rights reserved.

2.1 Warranty offer

	Items	Product Warranty Period	Remark
1	Standard Product Warranty	5 years	Free of charge
2	Extended Product Warranty	Additional 5 - 20 years	2-3% of the contract Value per year warranty terminates at 70%SOH

2.2 Warranty alternatives

Alternative1.

Supplement plan:new battery would be supplemented every 5or 10 years;（70%SOH）

Alternative2.

Redundant configuration to ensure certain years of warranty

Copyright © 2024 CESC GmbH. All rights reserved.

After-sales service

After-sales team	>30 members
Overseas service covering countries	>20
Domestic service covering provinces	>23

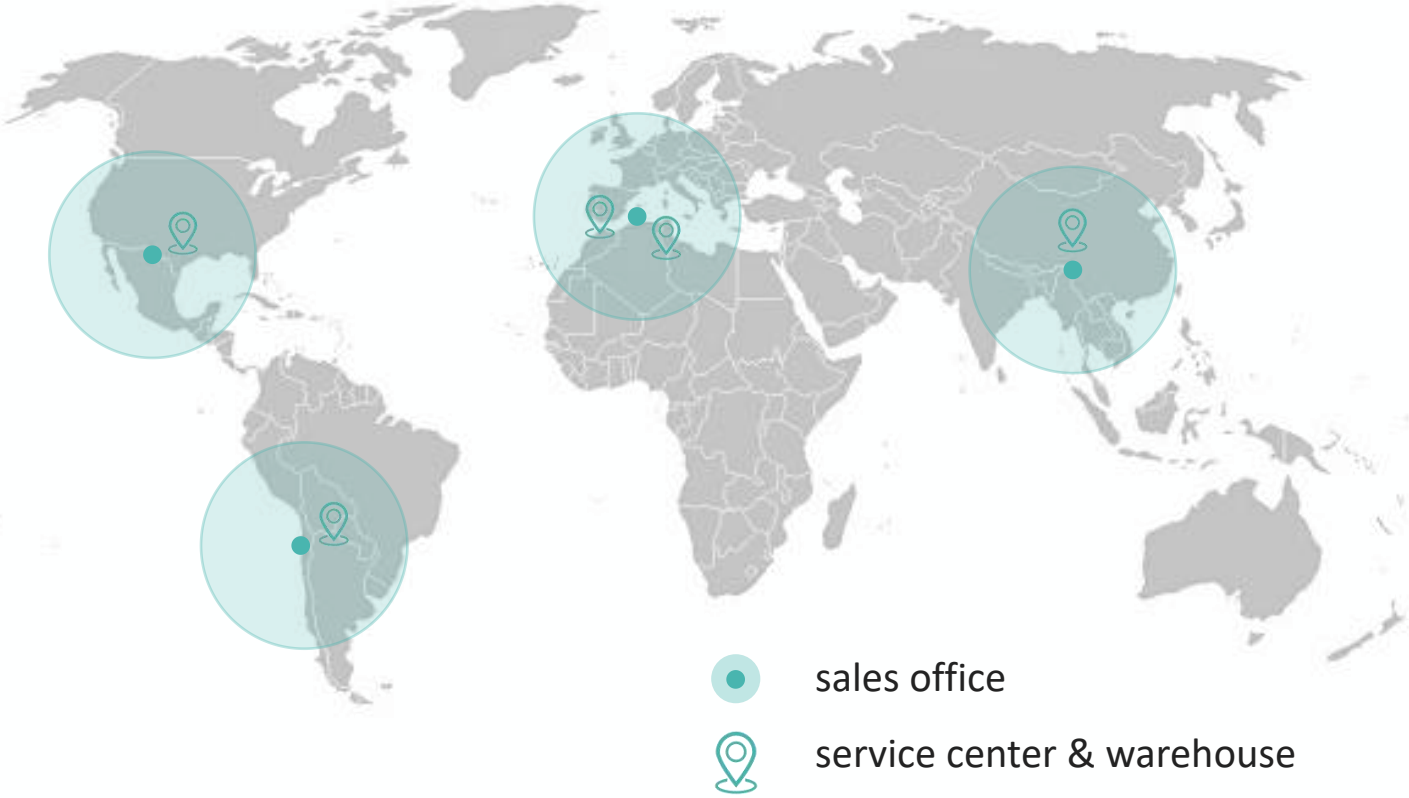

Copyright © 2024 CESC GmbH. All rights reserved.

we are working on 50+ projects, and and the actual installed capacity is over 200MWh

Project: textile factory

size :400kW/860kWh location:Shaoxin city zhejiang province

Project: livestock and poultry

size :200kW/430kWh location:Jiaxin city zhejiang province

Copyright © 2024 CESC GmbH. All rights reserved.

we are working on 50+ projects, and and the actual installed capacity is over 200MWh

Project: Aluminum Material factory

size :300kW/645kWh location:Suqian city Jiangsu province

Project: Plastic Products factory

size :200kW/430kWh location:Jiaxin city zhejiang province

Copyright © 2024 CESC GmbH. All rights reserved.

we are working on 50+ projects, and and the actual installed capacity is over 1GWh

Republic of Latvia

Project1.Independent energy storage plant
60MW/120MWh

Project2.Power plant of PV+BESS
20MW/50MWh

Copyright © 2024 CESC GmbH. All rights reserved.

we are working on 50+ projects, and and the actual installed capacity is over 1GWh

Dona Carmen in Chile

Project. power plant of PV+BESS (under construction)
55MW/110MWh

Copyright © 2024 CESC GmbH. All rights reserved.

we are working on 50+ projects, and and the actual installed capacity is over 1GWh

Dona Carmen in Chile

Project. Copper Mine UPS
32MW/56MWh

Copyright © 2024 CESC GmbH. All rights reserved.

CESC

Thanks for watching!

Consistent Energy Storage Concept

2024.Oct.

WeChat Public

Social Media

Copyright © 2024 CESC GmbH. All rights reserved.